FYA-T053222 Series FYA-T053222Zx
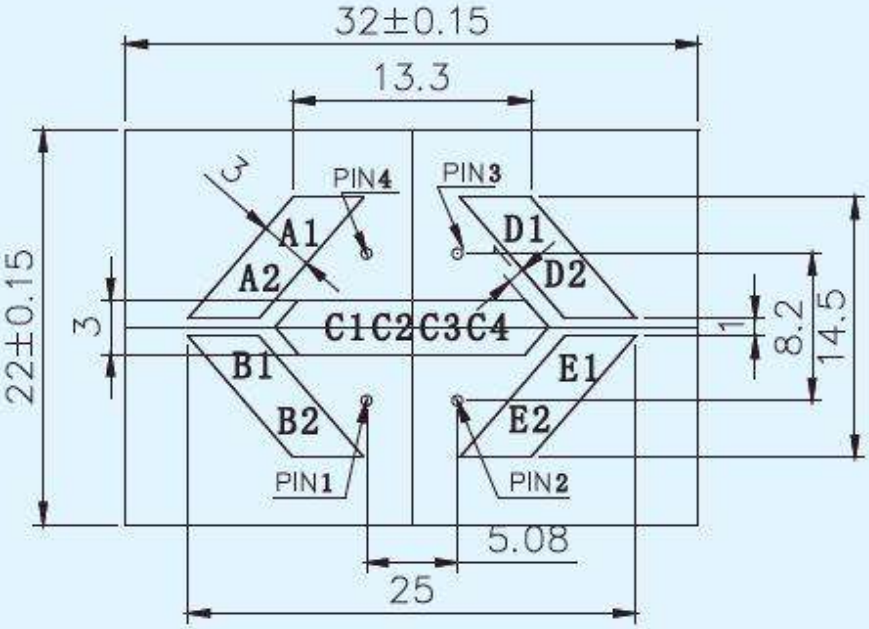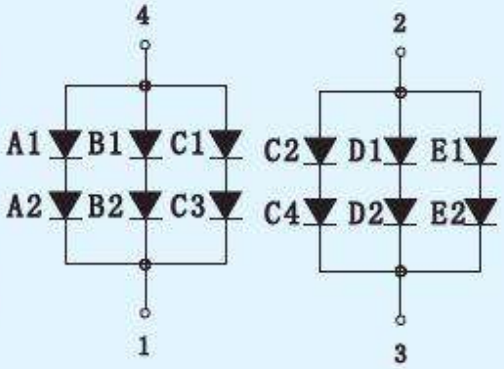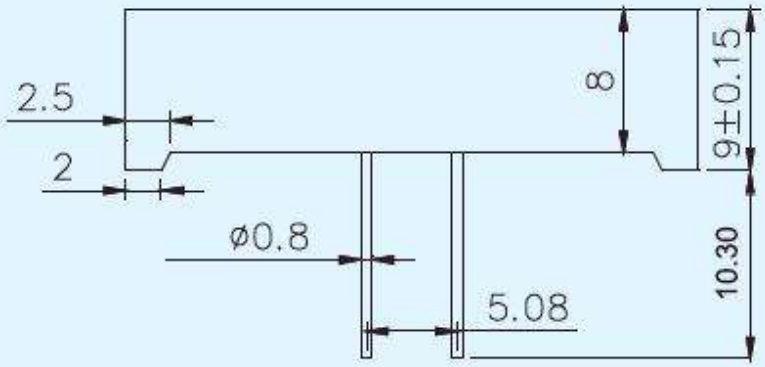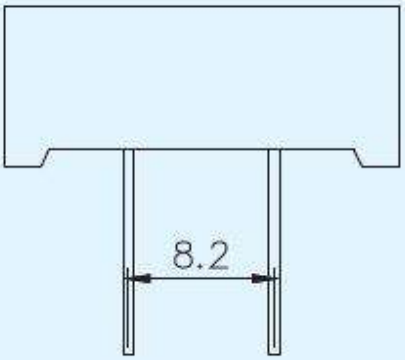
A-043