PART NO.	A107595-001	REV	ECO	DATE	APP
		A	102418	03-08-16	TLM

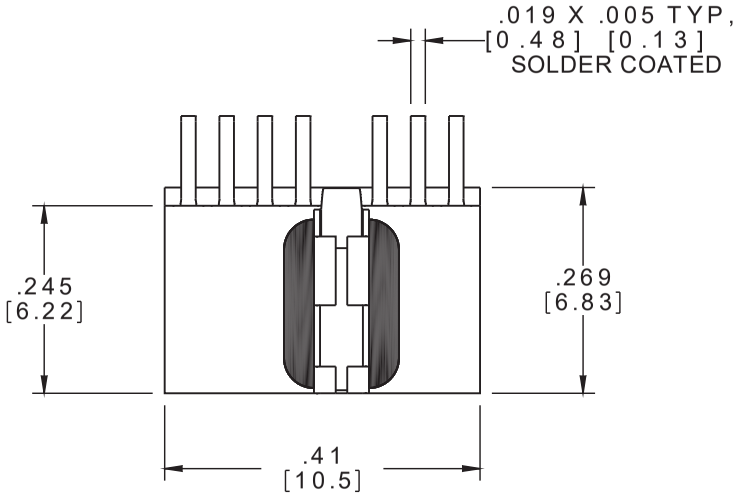

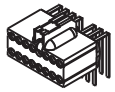

ACTUAL SIZE

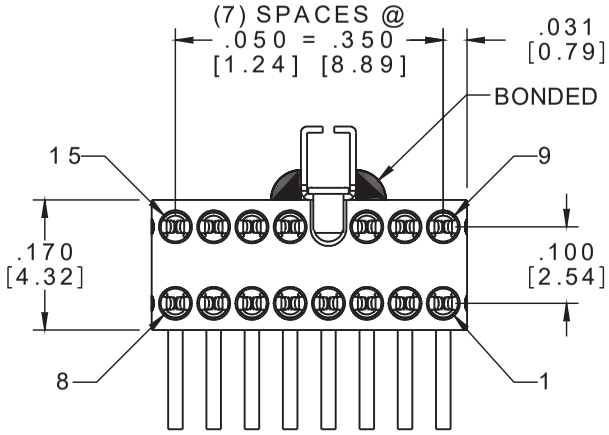

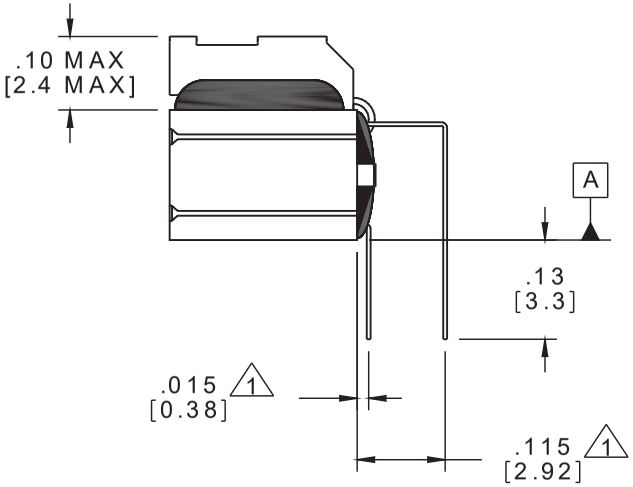

NOTE:

1 TAIL DIMENSIONS APPLY AT PLANE A

DIMENSIONS IN [ ] ARE IN MILLIMETERS UNLESS OTHERWISE NOTED AND ARE FOR REFERENCE ONLY

REF:

DRP / SLDW	THIRD ANGLE -TOLERANCES- UNLESS OTHERWISE NOTED DIMENSIONS IN INCHES 2 PL DEC ± .01 3 PL DEC ± .005 4 PL DEC ± .0005 ANGLES ± 1°	THIS DRAWING CONTAINS CONFIDENTIAL AND PROPRIETARY INFORMATION WHICH IS THE PROPERTY OF OMNETICS CONNECTOR CORP. THIS DOCUMENT MAY NOT, IN WHOLE OR IN PART, BE DUPLICATED, OR DISCLOSED FOR ANY PURPOSE, WITHOUT WRITTEN PERMISSION FROM OMNETICS CONNECTOR CORP.	OMNETICS CONNECTOR CORPORATION 7260 COMMERCE CIRCLE EAST MINNEAPOLIS, MN 55432 WWW.OMNETICS.COM
		DFTM. HV — DATE 11-24-15 CHK'D. — DATE APP'D. — DATE	TITLE: (15) PIN MALE DUAL ROW CONNECTOR W/LATCH
			CAGE CODE 61873 DWG NO. A107595-001 SHEET 1 OF 1 SCALE: 4:1 REV A