FOR-1351 Rev.1.0

| REVISION RECORD | | | | |
|---|---|---|---|---|
| REV | ECN | DESCRIPTION | DRFT | DATE |
| | | | | |

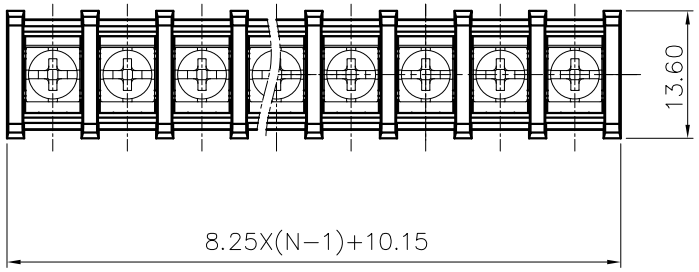


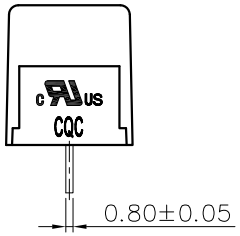


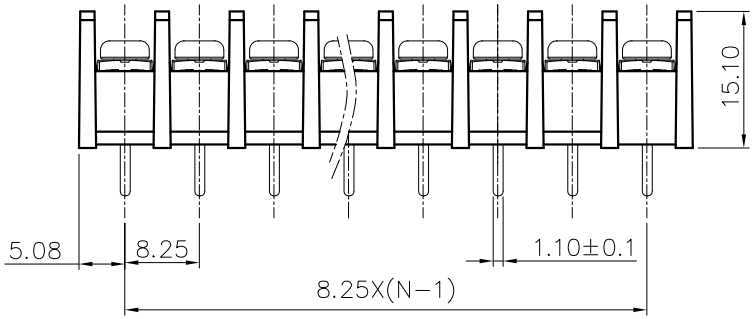


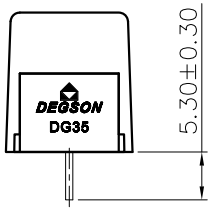


NOTES1:
UL Standard
1.Rated voltage/current : 300V / 20A
2.Torque value : M3 , 4.43Lb.in
3.Wire range : 22~12AWG

NOTES2:
1.Dimension shall be interpreted per ASME Y14.5-2009
2.Pitch : 8.25mm, Poles : N=02~24P
3.Withstanding voltage : AC1600V/1Min
4.Operating temperature: -40°C~+105°C
5.Undimensioned tolerances:

| Pitch range in mm | | | Nominal dimension range in mm | | | | | — ⌒ ⌭ |
|---|---|---|---|---|---|---|---|---|
| TO 6 | Over 6 TO 10 | Over 10 TO 24 | TO 30 | Over 30 TO 60 | Over 60 TO 100 | Over 100 TO 150 | Over 150 | 0.1/10 ∠ |
| ±0.15 | ±0.20 | ±0.30 | ±0.30 | ±0.50 | ±0.70 | ±1.00 | ±1.30 | ±2° |

6.RoHS Compliance

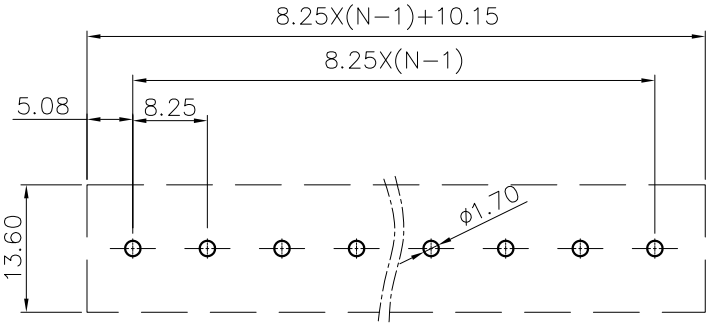


PCB LAYOUT

DG35C-B - XXP - 1Y - 00A (H)
- (Series No.)
- (Poles)
- (Single Pitch)
- (Color) :1.(Grey) 2.(Blue) 3.(Black) 4.(Green) 5.(Orange) 6.(Red) 7.(Transparent) 8.(Yellow) 9.(White)
- 00A-(Standard)
- (H) (RoHS)

| DETACHED LISTS | | | |
|---|---|---|---|
| PART NO.: / | DEGSON® 宁波高松电子有限公司 NINGBO DEGSON ELECTRICAL CO., LTD | | |
| APPD: / | NAME: DG35C-B-XXP-1Y-00A(H) | | |
| CHKD: / | | | |
| DRFT: / | TITLE: CUSTOMER DRAWING | REV | D0 |
| THIRD ANGLE PROJECTION | DRAWING NO.: / | SHEET | 1/1 |
| | MM (INCH) DO NOT SCALE DRAWING | SCALE | 1:1 |