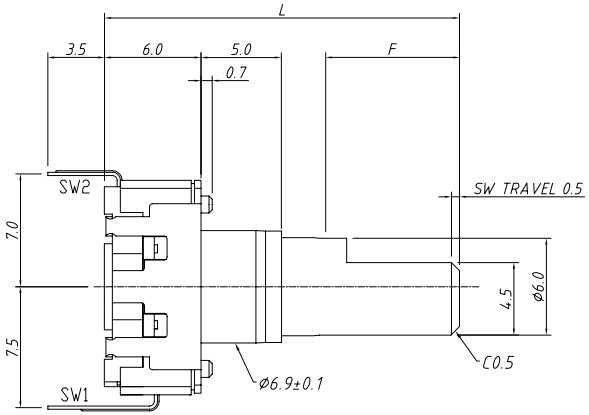

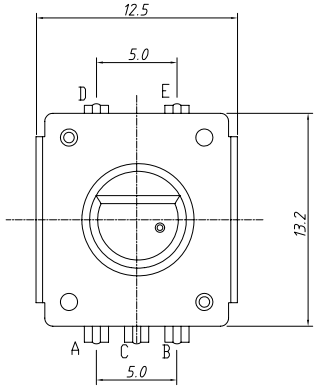

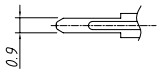

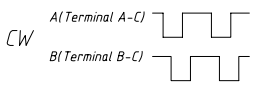

OUTPUT PHASE

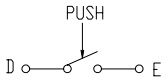

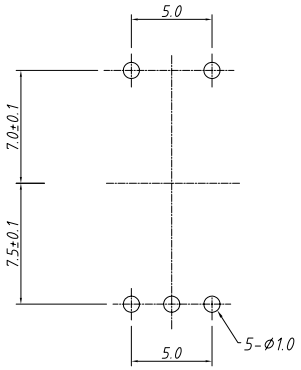

PCB LAYOUT

Electrical Characteristics

Rated Power:	DC5V 5mA Max.
Output signal:	A \ B 2signals
Resolution:	12 Pulses 360°/ 24 Pulses 360°
Phase difference:	0.08T Min.
Sliding noise:	3mS Max.
Contact Resistance:	1 Ω Max.
Insulation resistance:	100MΩ Min. at DC 250V
Withstand voltage:	AC300V / 1 min

Mechanical

Total rotation angle:	360°
Rotational Torque:	1kgf.cm Max
Click Torque:	20~150 gf.cm
Push-pull Strength of Shaft:	8.0kgf Min.
Number of Detents:	12 detents Step angle:30°±2° 24 detents Step angle:15°±2° Without detents
Rotational Life:	30000±200 cycles per 100gf.cm Min.
Temp. Range:	-30 ° C ~ + 85 ° C
Soldering:	250 ° C 5Sec. Max.

Order Information:

L-KLS4-EK1203 S - B XX- XXX

- Shaft type and Length Code
- Pulse and Detent Code
  - 6A: 12 Pulse with 12 Detents
  - 6B: 12 Pulse without Detent
  - 8A: 24 Pulse with 24 Detents
  - 8B: 24 Pulse without Detent
- RoHS
- 12mm Encoder
- Switch: S- with switch

Shaft type

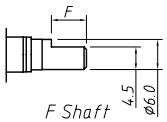

F Shaft

L	17.5	20	22.5	25	30	
F	5	7	7	12	10	

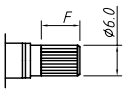

T Shaft

L	15	17.5	20	22.5	25	30
F	2.5	5	7	7	12	12

GENERAL TOLERANCE	ANGLE TOLERANCE	PROJECTION		Description:	12MM Encoder
X. ±0.50	X. ±5°	UNITS	mm		Plastic shaft with Switch
.X ±0.38	.X ±3°	SHEET SIZE	A4		
.XX ±0.25	.XX ±2°		KLS P/N:		KLS4-EK1203S-BXX-XXX

Draw by: Date	2015-09-01			
Check by:: Date	2015-09-15			
SCALE		SHEET		OF

KLS ELECTRONIC CO ., LTD.