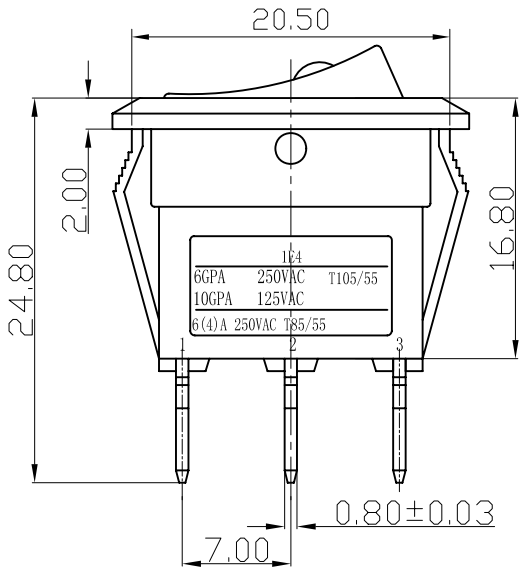


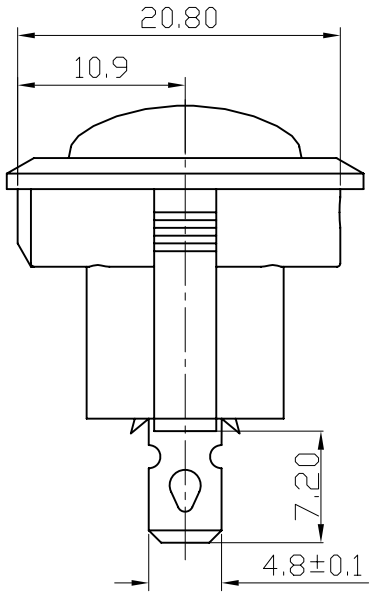


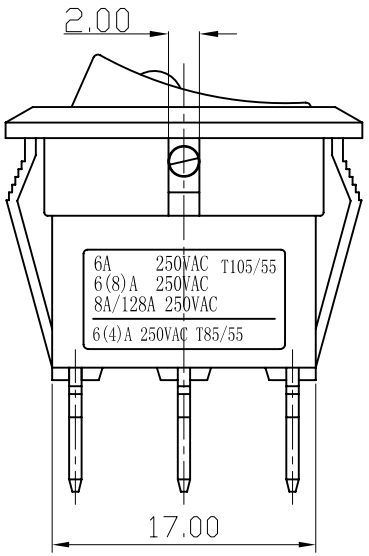


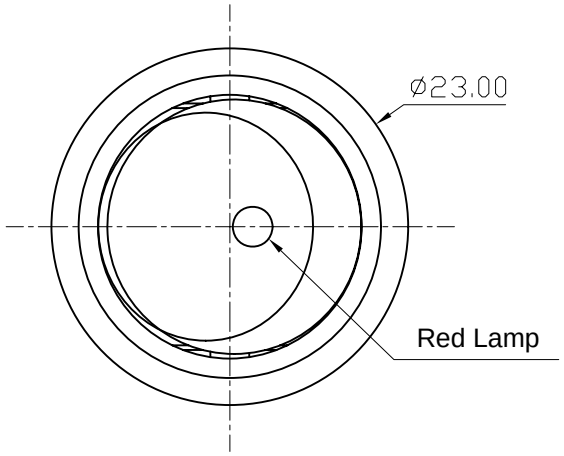


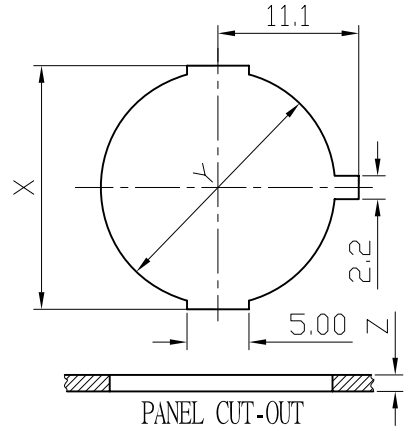


| PANEL CUT-OUT | | |
|---|---|---|
| Z | X | Y |
| 1.50～2.00 | 20.40～20.60 | 19.4～19.5 |
| 2.00～3.00 | 20.60～21.10 | 19.4～19.5 |

NOTES:

1.Rating:

CQC 6A 250V AC T105/55
6(8)A 250VAC
8A/128A 250VAC

cUL 10GPA 125V AC / 6GPA 250V AC T105/55

VDE ENEC 6(4)A 250V AC T85/55

KC 6(4)A 250V AC T85/55

2.Circuit Diagram:3P ON-OFF

3.Terminal Strength:≥80N

4.Electrical life:≥10000 cycles

5.Withstand Voltage:Withstand Voltage:1500VAC 1min
Terminals to Button:3000VAC 1min
Leakage Current:1mA

6.Current resistance:≤50mΩ(initial)

7.Insulation resistance:≥100MΩ

8.Body Materil:NYLON 66 94V-0~2

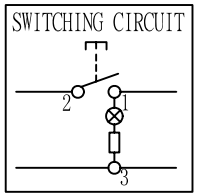


| | | | |
|---|---|---|---|
| A4 | | | |
| A3 | | | |
| A2 | | | |
| A1 | | | |
| REV. | DATE | REVISION DESCRIPTION | ISSUE |

| 普通公差: COMMON TOLERANCE : | |
|---|---|
| UP TO 5 | ±0.20 |
| ABOVE 5 TO 30 | ±0.30 |
| ABOVE 30 | ±0.50 |
| ANGULAR | ±5° |

# KLS ELECTRONIC CO., LTD

| | | | | | | | |
|---|---|---|---|---|---|---|---|
| 单 位 UNIT | mm | 投 影 PROJECTED | | 品 名 PRODUCT NAME | 跷板开关 | 比 例 SCALE | Free |
| 绘 图 DRAWN BY | 周金勇 | 核 对 CHECKED BY | 梁金勇 | 型 号 MODEL NO. | L-KLS7-RS601C1-101N171BB | | |
| 日 期 DATE | 2015.09.10 | 核 准 APPROVAL BY | 周培雷 | 图 号 DWG NO. | | | |