MICRO SWITCH
A DIVISION OF MINNEAPOLIS-HONEYWELL REGULATOR COMPANY
FREEPORT, ILLINOIS
FED. MFR. CODE 91[illegible]

ACTUATOR-SWITCH

CATALOG LISTING
JM-2

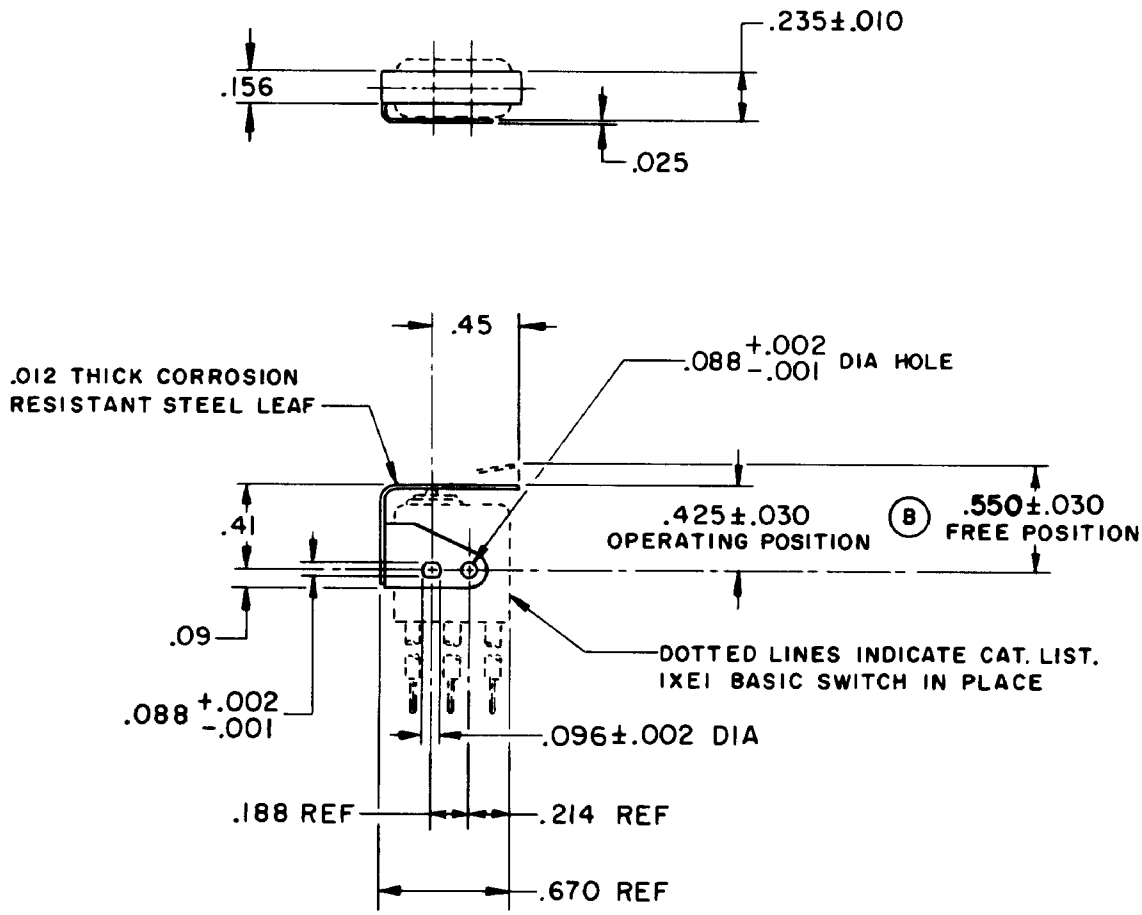

THIS DRAWING COVERS A PROPRIETARY ITEM AND IS THE PROPERTY OF MICRO SWITCH, A DIVISION OF MINNEAPOLIS-HONEYWELL REGULATOR CO. THIS DRAWING IS NOT TO BE COPIED OR USED WITHOUT THE APPROVAL OF MICRO SWITCH.

CHARACTERISTICS WITH IXEI BASIC SWITCH INSTALLED	ELECTRICAL DATA		SCALE FULL
OPERATING FORCE — — — — — 21 OZ MAX	CONTACT ARRANGEMENT	BREAK DISTANCE	DO NOT SCALE PRINT
RELEASE FORCE — — — (A) — — — 3 OZ MIN			UNLESS OTHERWISE SPECIFIED DIMENSIONS ARE IN INCHES
DIFFERENTIAL TRAVEL — — — — .012 MAX			TOLERANCES ARE:
OVERTRAVEL — — — — — — — — — .009 MIN			ONE PLACE (.0) ±.030 TWO PLACE (.00) ±.015 THREE PLACE (.000) ±.005 ANGLES ±
			WEIGHT

REPLACES	JM-2
RELEASE NO.	SR 9747
DRAWING NUMBER	M
ISSUE	X X 3
CHECK	24 JULY 61
CHECK	EAS
CHECK	24 JULY 61
CHECK	DAW
DRAWN	OMW 20 JUL 61

REVISIONS
A C017844 OMW 26 FEB 63
B C018559 VDF 17 OCT 63

FO-50378